10 G 300m XFP 850 nm

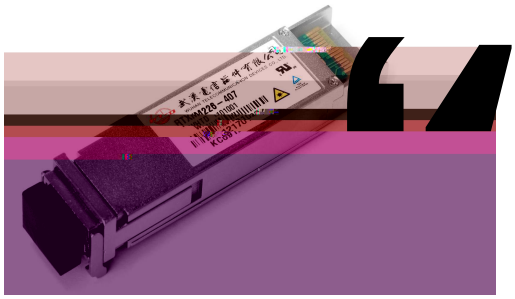

[redacted]

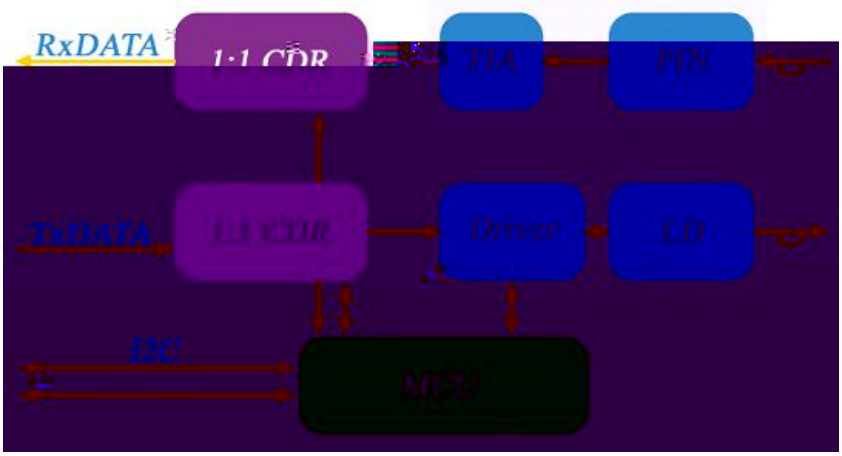
RxDATA
1:1 CDR
TIA
PIN
TxDATA
Driver
LD
I2C
MCU

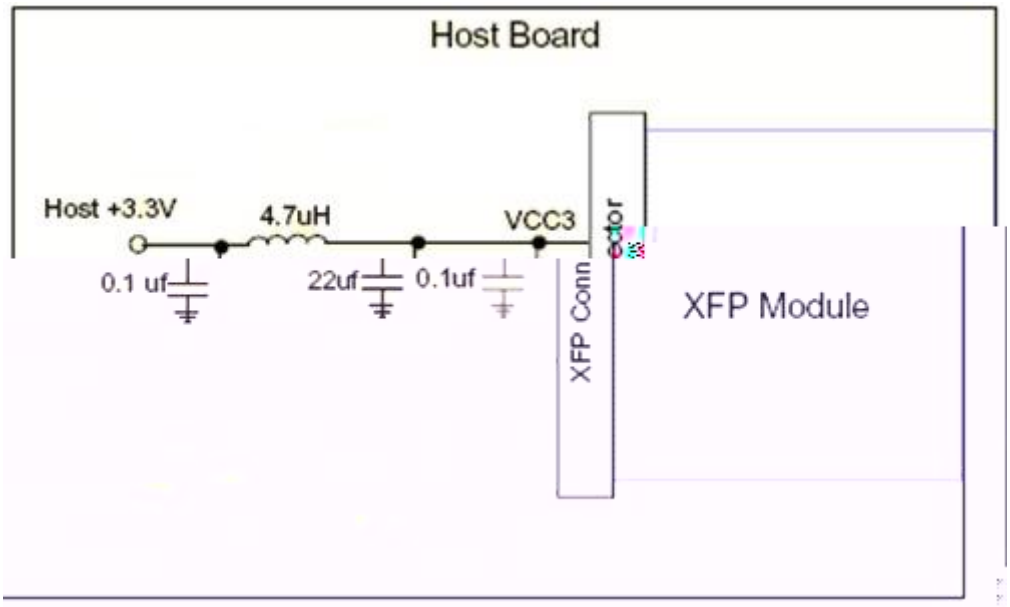
Host Board
Host +3.3V
4.7uH
VCC3
0.1 uf
22uf
0.1uf
XFP Connector
XFP Module

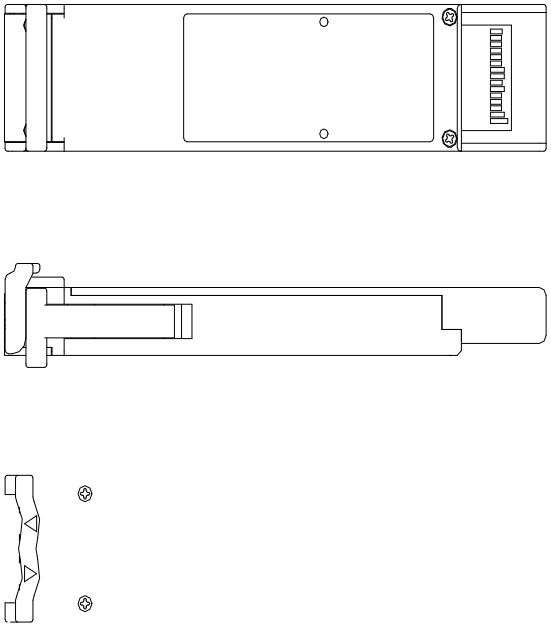

Unit: mm
Tolerance: ±0.1